Published: 11-May-2011

Fuel Charging and Controls - Turbocharger - TD4 2.2L Diesel -

Turbocharger General Specification

Item	Specification
Type	Variable resistance
Pressure @ 2000rpm	1.1 bar (16 lb/in²)
Pressure @ 3000rpm	1.2 bar (17 lb/in²)

Torque Specifications

Description	Nm	lb-ft
Catalytic converter	25	18
Turbocharger oil return line	10	7
Turbocharger oil feed line bolt -with new oil feed line and bolt fitted		
Turbocharger oil feed line kit part number		
LR019465	17	13
LR006648	24	18
Turbocharger oil feed line bolt - with oil feed line and bolt re-used		
Engine Number		
10DZ584056159 onwards (manual transmission) or 10DZ594055667 onwards (automatic transmission)	17	13
Up to 10DZ584056158 (manual transmission) or up to 10DZ594055666 (automatic transmission)	24	18
Turbocharger heatshield retaining bolts	10	7
Turbocharger bolts*	24	18

*** New nuts/bolts must be fitted**

mcx30.com

Published: 11-May-2011

Fuel Charging and Controls - Turbocharger - TD4 2.2L Diesel - Turbocharger

Description and Operation

COMPONENT LOCATION

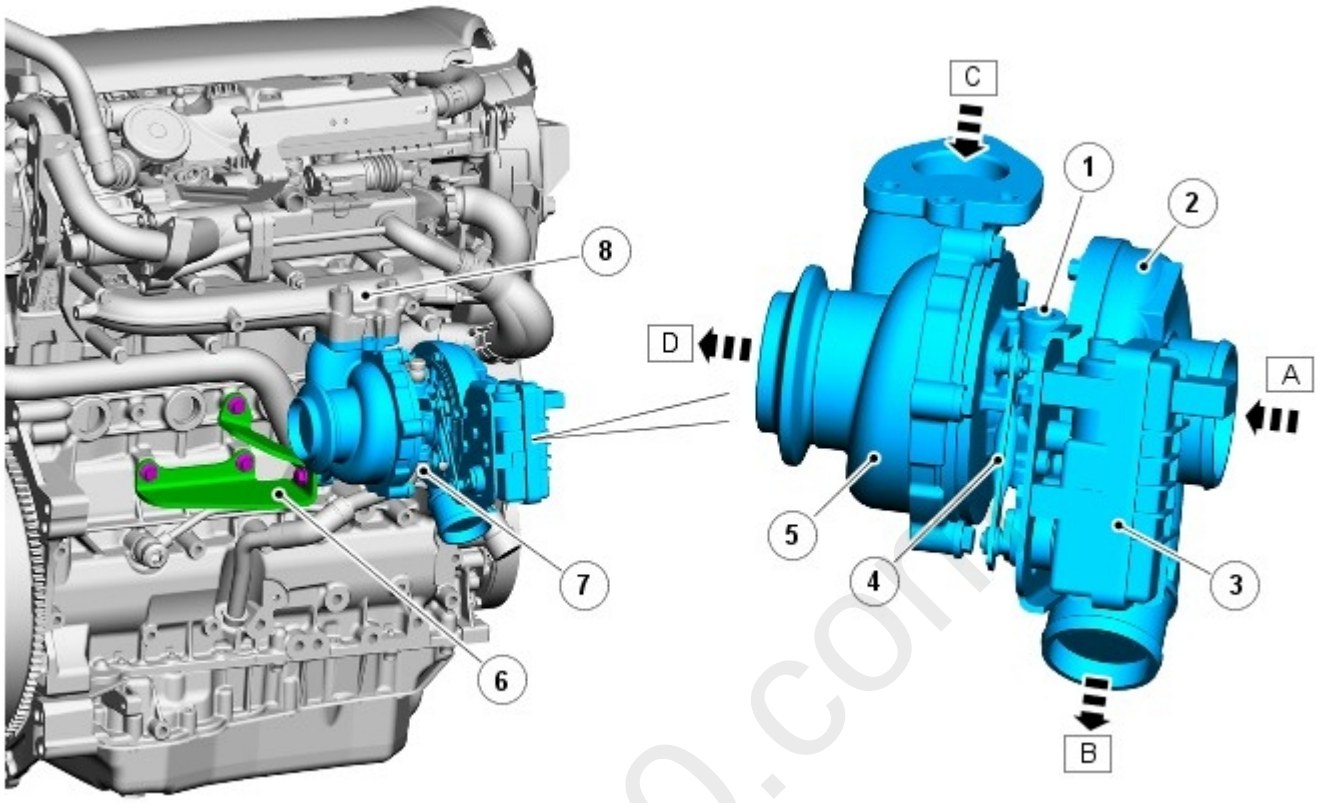

E85843

Item	Part Number	Description
A	-	Intake air from air filter
B	-	Compressed air to charge air cooler
C	-	Exhaust gas inlet
D	-	Exhaust gas outlet
1	-	Oil supply pipe
2	-	Compressor housing
3	-	Rotary Electronic Actuator (REA)
4	-	Variable vane actuator linkage
5	-	Turbine housing
6	-	Turbocharger support bracket
7	-	Oil return pipe
8	-	Exhaust manifold

OVERVIEW

The TD4 engine features a Garrett Rotary Electronic Actuated (REA) variable geometry turbocharger. The turbocharger is mounted to the exhaust manifold on the Right-Hand (RH) side of the engine, and secured to the cylinder block with a bracket. An oil pipe with banjo type fixing is attached between an outlet on the RH side of the cylinder block and the top of the turbocharger housing, and provides pressurized oil to the turbocharger bearings. An oil pipe attached to the bottom of the turbocharger is connected to the oil pan housing, and directs return oil from the turbocharger into the oil pan. A heat shield is installed over the turbocharger and exhaust manifold to protect other components, and to prevent accidental contact with the hot exhaust components.

The turbocharger comprises a turbine and compressor wheel mounted on a common shaft, enclosed within a cast housing. The common shaft is supported on 2 semi-floating bearings. The cast housing forms 2 chambers that closely surround the turbine and compressor wheels. The turbine wheel is positioned between the exhaust gas flow from the engine and the exhaust system. The compressor wheel is positioned in the intake air flow between the air filter and outlet to the charge air cooler.

During turbocharger operation, the turbine and compressor shaft may reach speeds in excess of 200,000 rpm, and produce a charge air (boost) pressure of up to 1.7 bar (25 psi). A pre-turbine pressure of 3 bar (44 psi) and a temperature of 800°C (1472°F) may be generated inside the turbine chamber.

A REA is attached to the compressor housing, and is connected via a linkage to a rotary adjusting ring located within the turbine housing. The internal circumference of the rotary adjusting ring houses a set of radial variable vanes. The variable vanes are positioned to intercept the exhaust gas flow from the engine, ahead of the turbine wheel.

The REA is directly controlled by the Engine Control Module (ECM). The ECM constantly controls the position of the actuator using input information from various engine and vehicle mounted sensors. A feed back sensor within the REA continuously informs the ECM of the actuator position during turbocharger operation. In the event that the variable vanes fail to reach the requested position, a Diagnostic Trouble Code (DTC) is stored in the ECM memory.

PRINCIPLES OF OPERATION

The turbocharger uses the energy of the exhaust gas flow from the engine to provide compressed (charged) air to the intake air system. The variable geometry vanes make sure the turbocharger produces the required level of intake air boost pressure for the current engine operating conditions.

The turbocharged engine provides the following advantages over a conventional naturally aspirated engine:

- Greater volumetric efficiency
- Improved engine power and torque
- Reduced fuel consumption
- Reduced emissions
- Re-use of exhaust gas energy
- Un-affected by altitude
- Limited periods of over-boost for immediate engine demands.

Typical Rotary Electronic Actuated Turbocharger

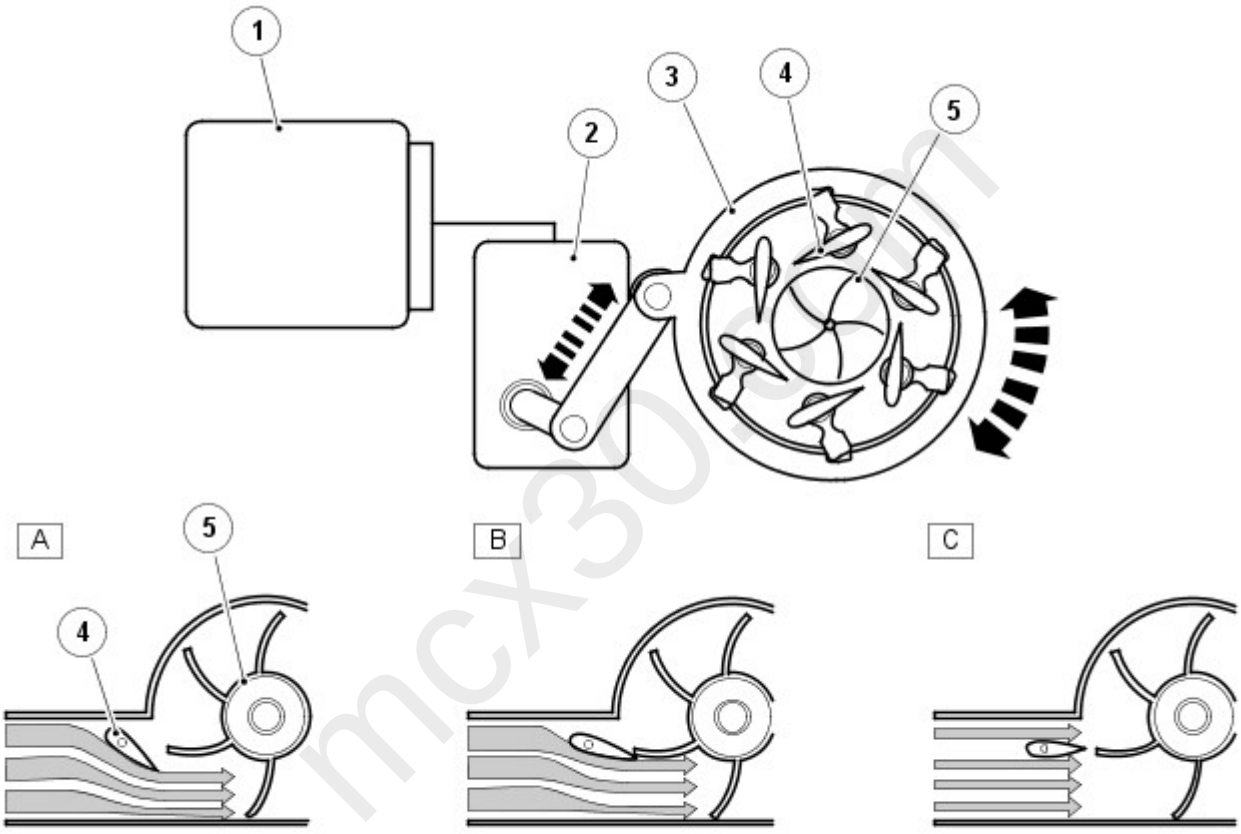

Item	Part Number	Description
A	-	Low engine speed
B	-	Moderate engine speed
C	-	Maximum engine speed
1	-	ECM
2	-	Rotary Electronic Actuator
3	-	Rotary adjusting ring
4	-	Variable vanes
5	-	Turbine wheel

In response to signals from various sensors, the ECM controls the REA to operate the rotary adjusting ring. Movement of the adjusting ring alters the pitch angle of the variable vanes to deflect the flow of exhaust gas onto the inside center or outside edge of the turbine wheel.

The maximum position of the turbocharger variable vanes (fully open) is also the emergency default position in the event of an electrical fault. The REA will move the variable vanes to the fully open position to prevent engine damage due to excessive boost pressure.

A - Low Engine Speed

At low engine speed the volume of exhaust gas leaving the engine is low. The vanes are moved toward the closed position to direct the exhaust gas flow to the outside edge of the turbine wheel. The closed position of the vanes creates a restriction to the gas flow and increases the gas velocity to the turbine wheel. The turbine wheel speed is increased, consequently producing more charge air (boost pressure) from the compressor.

B - Moderate Engine Speed

As engine speed and exhaust gas volume increase, the vanes are moved to the open position to direct the exhaust gas flow toward the center of the turbine wheel. The vanes do not restrict the exhaust gas flow and therefore exhaust gas velocity is dependant on engine speed. The turbine wheel speed is maintained due to the increased velocity of the gases leaving the engine and being directed toward the center area of the turbine wheel.

C - Maximum Engine Speed

At maximum engine speed the volume of exhaust gas leaving the engine is high. The vanes are moved toward the fully open position and do not affect the gas velocity. The exhaust gas flow contacts the center area of the turbine wheel to maintain the turbine wheel speed and boost pressure from the compressor.

Over-Boost Pressure

During periods of medium to hard acceleration, the turbocharger is required to produce a limited period of over-boost pressure from the compressor to meet the current engine fueling requirement. The ECM will request and allow the REA to move the variable vanes toward the closed position to increase the velocity of the already high-speed turbine wheel. The over-boost condition is allowed by the ECM for the limited period.

Barometric Pressure Sensor

At high altitude the turbocharger will function normally, but due to the lower ambient air pressure the turbine and compressor may tend to over-speed. A barometric pressure sensor is located in the ECM to prevent over-boost and possible engine damage occurring under these conditions. The ECM opens the variable vanes earlier during the opening phase to suit the altitude of the vehicle.

Turbocharger Lubrication

The rapid acceleration and deceleration demands of the turbocharger rely on a steady flow of clean oil. The oil supplied by the engine lubrication system provides lubrication to the turbocharger shaft and bearings, while also acting as a coolant for the turbocharger center housing.

To maintain the life expectancy of the turbocharger, the engine oil must be replenished at regular service intervals with the recommended quality and quantity of oil. The oil must have a free-flow through the turbocharger and an unrestricted return to the engine oil pan.

mcx30.com

Published: 11-May-2011

Fuel Charging and Controls - Turbocharger - TD4 2.2L Diesel - Turbocharger Actuator Rod

Removal and Installation

Removal

- NOTE: Removal steps in this procedure may contain installation details.
- NOTE: Some variation in the illustrations may occur, but the essential information is always correct.

1. **1.** WARNING: Do not work on or under a vehicle supported only by a jack. Always support the vehicle on safety stands.

   Raise and support the vehicle.

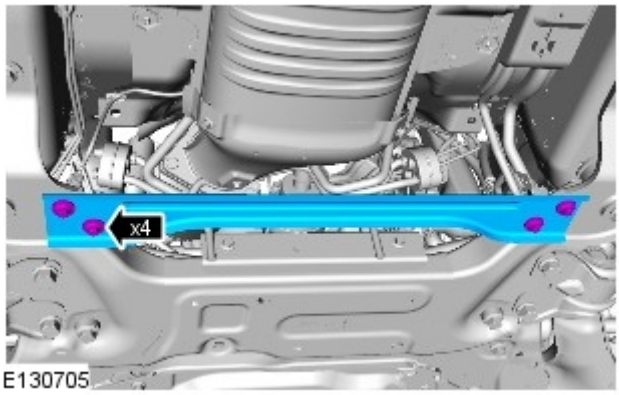

E130705

2. *Torque:* 25 Nm

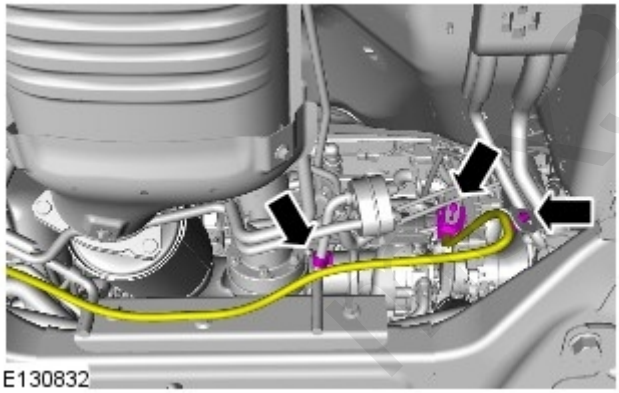
E130832

3. **3.** NOTE: Vehicles fitted with diesel particulate filter (DPF)

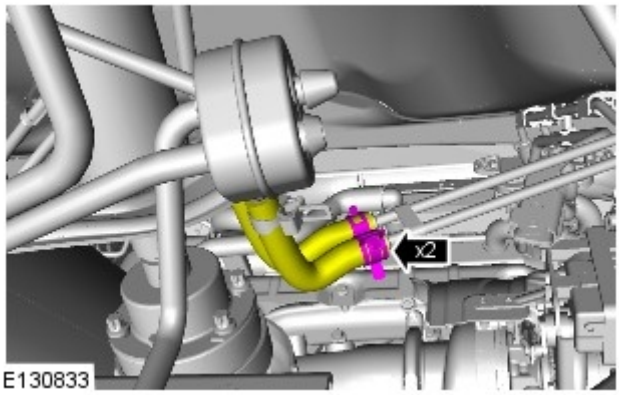

E130833

4. **4.** NOTE: Note the position of the hoses.

5.

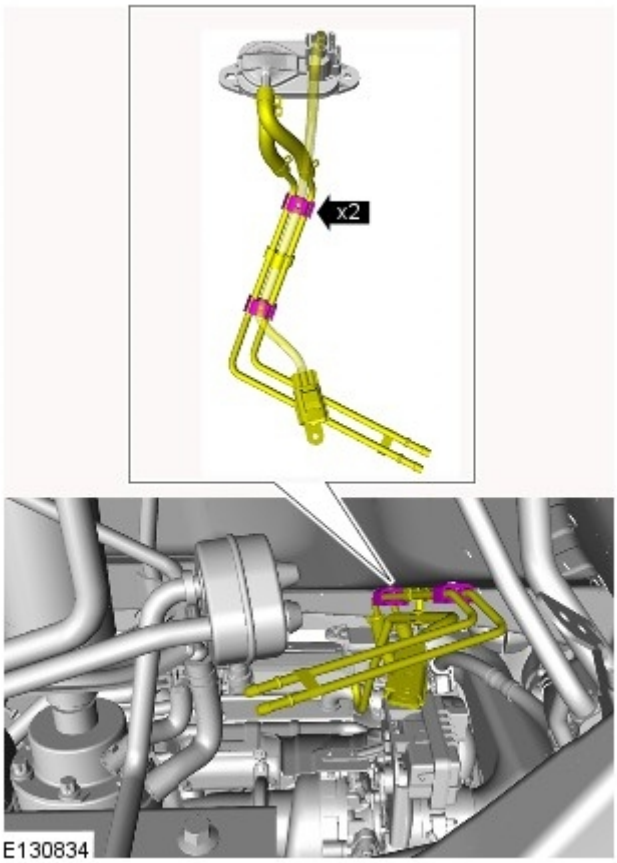

6. **6.** NOTE: All vehicles.

   Torque: 10 Nm

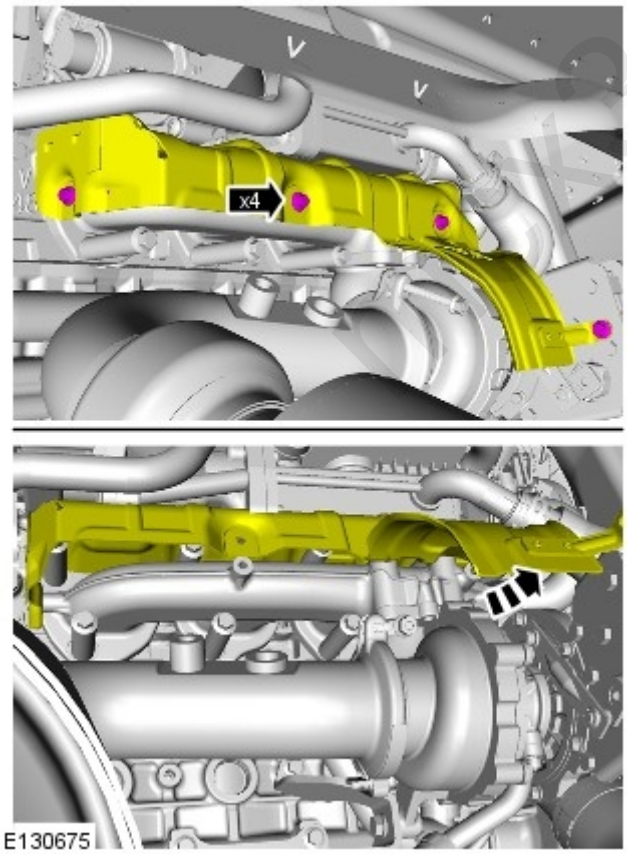

vk30.com

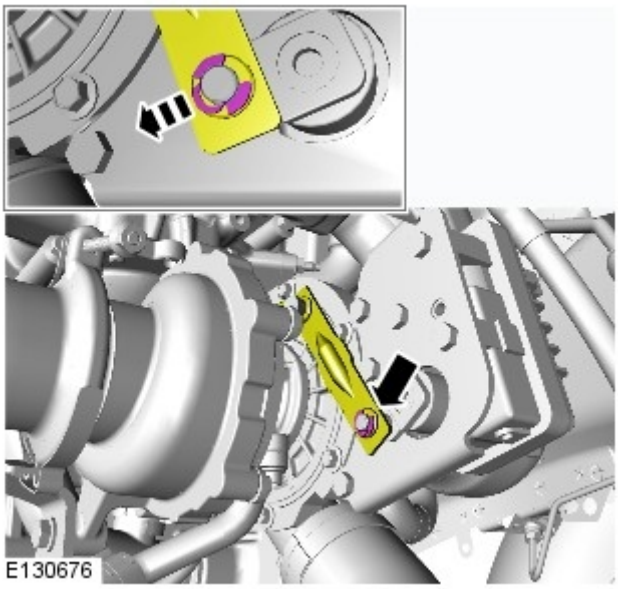

7. **7.** CAUTIONS:

Do not apply sufficient force to deform the turbocharger variable vane actuator crank components.

Do not apply rotational force to the turbocharger variable vane actuator crank during removal, as the worm gear can be damaged.

- It may be necessary to place a suitable tool between the crank shoulder and the actuator rod, and leaver from side to side.

8.

- • NOTE: This may be difficult on the first few cycles due to internal carbon build up.

  Using finger pressure, cycle the turbocharger variable vane actuator mechanism to make sure movement is sufficient.
- Cycle 10-20 times as necessary to clear movement.

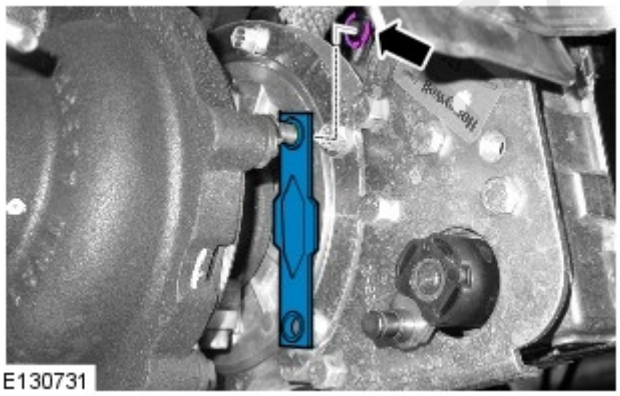

9. **9.** CAUTION: Do not use excessive force, or lever against the crank arm, as this may bend the crank arm, or damage the turbo mechanism.

- Use penetrating lubricant spray as required.

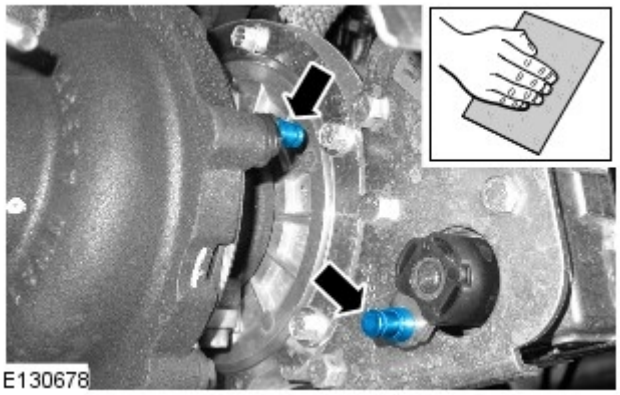

10. **10.** NOTE: It may be necessary to use a very fine wet and dry paper to polish and remove corrosion.

- Apply penetrating oil to both turbo and actuator pins.
- Clean the pin surfaces.

Installation

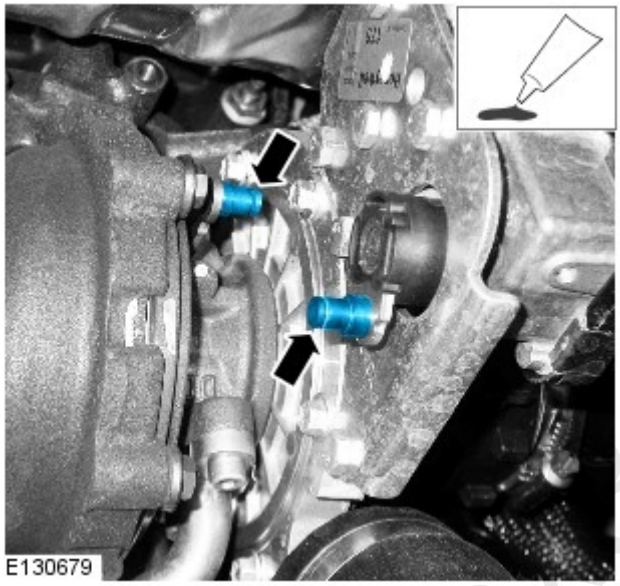

1.

- Apply specified high temperature lubricant (Landrover Part No. LR029042) to both pins, making sure they are completely covered.

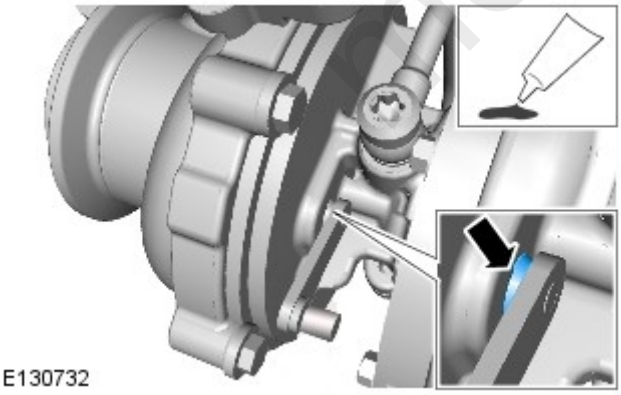

2.

- Apply specified high temperature lubricant (Landrover Part No. LR029042) to the internal bush interface with the turbocharger.

3. **3.** NOTE: Install new retaining clips.

• NOTE: Rotate the new retaining clips in the grooves with a suitable tool to check for correct installation.

• NOTE: Apply grease over the actuator pins, and the actuator connections to protect.

To install, reverse the removal procedure.

Published: 11-May-2011

Fuel Charging and Controls - Turbocharger - TD4 2.2L Diesel - Turbocharger

Removal and Installation

Removal

WARNING: Observe due care when working near a hot exhaust system.

1. **1.** WARNING: Make sure to support the vehicle with axle stands.

   Raise and support the vehicle.

2. Remove the exhaust gas recirculation (EGR) cooler.

   Refer to: Exhaust Gas Recirculation (EGR) Cooler (303-08B Engine Emission Control - TD4 2.2L Diesel, Removal and Installation).

3. Remove the catalytic converter.

   Refer to: Catalytic Converter - Vehicles Without: Diesel Particulate Filter (DPF) (309-00B Exhaust System - TD4 2.2L Diesel, Removal and Installation).

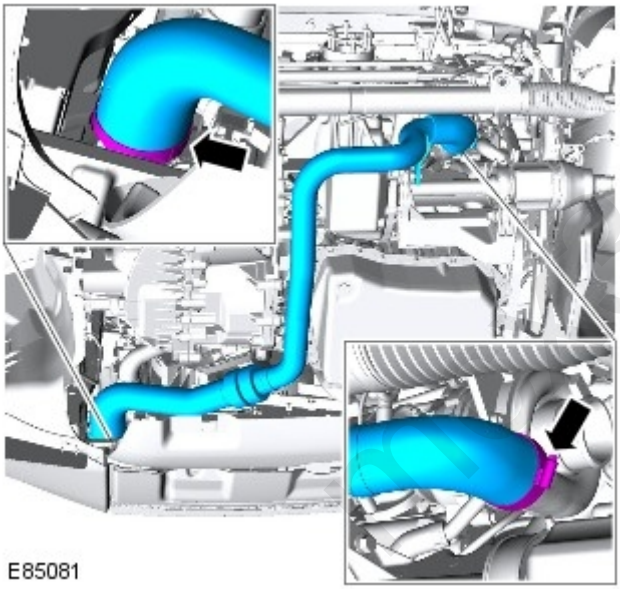

4. **4.** CAUTION: Make sure that all openings are sealed. Use new blanking caps.

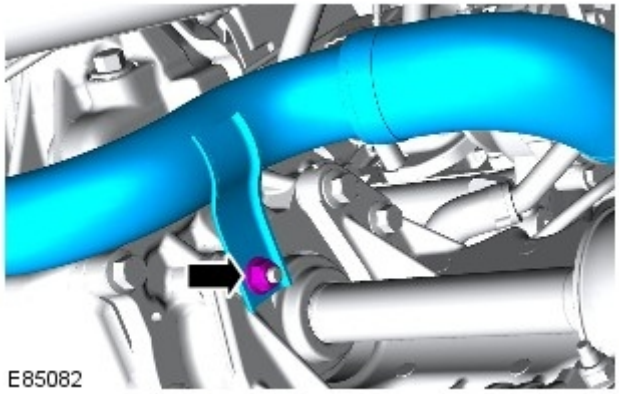

5.

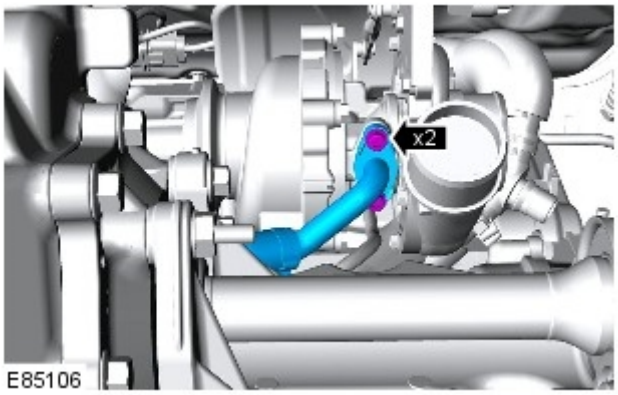

6. **6.** CAUTION: Make sure that all openings are sealed. Use new blanking caps.

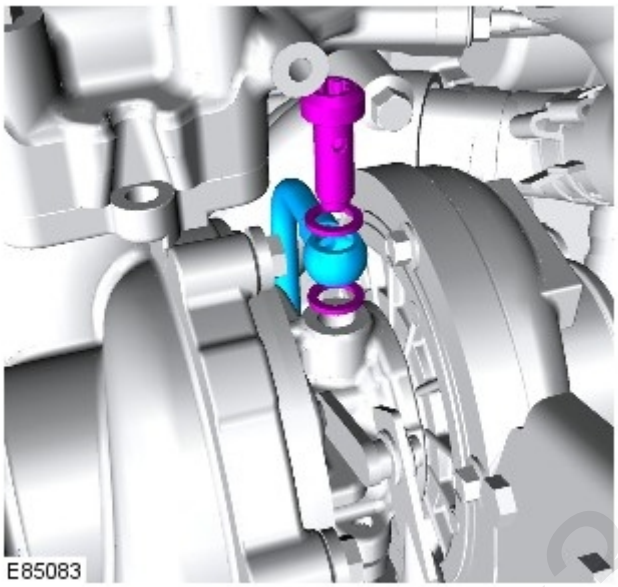

7. **7.** CAUTION: Make sure that all openings are sealed. Use new blanking caps.

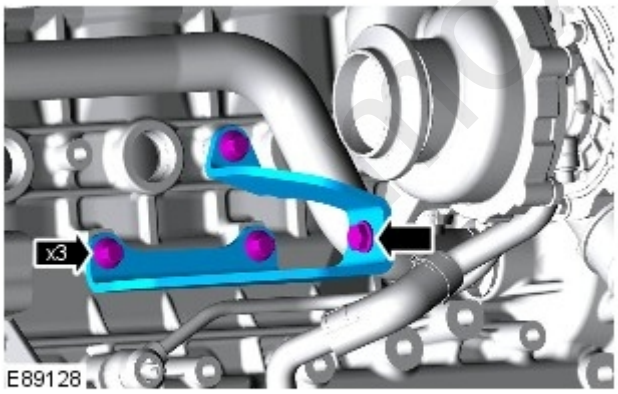

8.

mex30.com

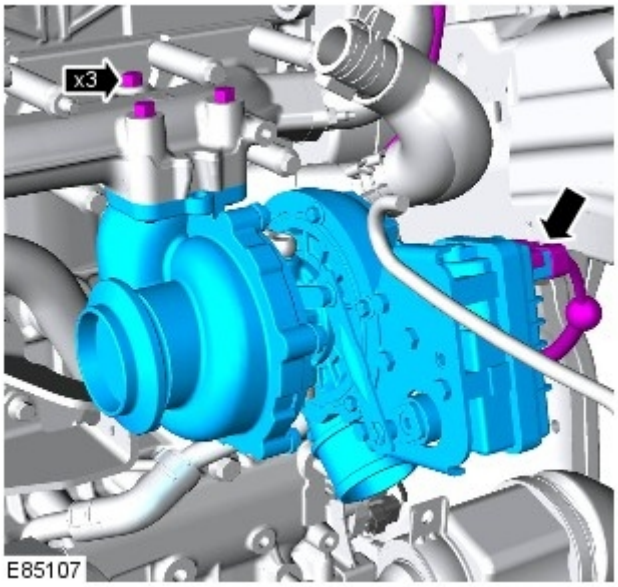

9. **9.** CAUTION: Make sure that all openings are sealed. Use new blanking caps.

Installation

1. **1.** CAUTIONS:

   Make sure that the component is clean, free of foreign material and lubricant.

   Make sure that new bolts are installed.

   Install the turbocharger.

   Torque: 24 Nm

2.
   - Install the turbocharger support bracket, but do not fully tighten at this stage.
   - Tighten the support bracket to turbocharger bolt.

     Torque: 24 Nm
   - Tighten the support bracket to cylinder block bolts.

     Torque: 24 Nm

3. **3.** CAUTIONS:

   Make sure that the area around the component is clean and free of foreign material.

   Make sure that new sealing washers are installed.

   • NOTE: For the turbocharger oil feed pipe bolt torque figure, refer to the specifications section.

   Connect the turbocharger oil feed pipe.

   Refer to: Specifications (303-04C Fuel Charging and Controls - Turbocharger - TD4 2.2L Diesel, Specifications).

4. **4.** CAUTION: Make sure that the area around the component is clean and free of foreign material.

   • NOTE: Install a new gasket.

   Connect the turbocharger oil return pipe.

mcx30.com

Torque: 10 Nm

5. Install the turbocharger outlet pipe.

   Torque: 25 Nm

6. Install the catalytic converter.

   Refer to: Catalytic Converter - Vehicles Without: Diesel Particulate Filter (DPF) (309-00B Exhaust System - TD4 2.2L Diesel, Removal and Installation).

7. Install the EGR cooler.

   Refer to: Exhaust Gas Recirculation (EGR) Cooler (303-08B Engine Emission Control - TD4 2.2L Diesel, Removal and Installation).

8. Check and top-up the engine oil.

mcx30.com